USER MANUAL
MANUAL DE USUARIO

CE - R290

SPRAY SYSTEM
SISTEMA DE DUCHAS

MODELS/MODELOS

NDP20
DP20
NG30
NG35
NG45
NG60
NG80
NG110
NG150
MDP150

EN
ES
FR
DE
PT
IT
EL
DA
NL
SV
NB
PL
RU
한국
CS
TR
بيكرتلا ليدل

INDEX / ÍNDICE

ENGLISH	01
ESPAÑOL	08
FRANÇAIS	15
DEUTSH	22
PORTUGUÊS	29
ITALIANO	36
ΕΛΛΗΝΙΚΑ	43
DANSK	51
NEDERLANDS	58
SVENSKA	65
BOKMÅL	72
POLSKI	79
PYCCKO	86
한국어	93
ČEŠTINA	100
TÜRKÇE	107
114	دليل التركيب

THIS MANUAL IS PART OF THE PRODUCT. READ IT CAREFULLY IN ORDER TO USE AND MAINTAIN THE EQUIPMENT CORRECTLY.
IT IS IMPORTANT TO KEEP IT FOR FUTURE TROUBLESHOOTING AND REFERENCE.

WARNING

This machine is intended for domestic use and similar applications.
The installation of this equipment should be done by the Technical Assistance Service department.
The socket should always be placed on an accessible location.
ALWAYS disconnect the power supply from the machine BEFORE any cleaning or maintenance service.
Any change needed on the electrical installation for the appropriate connection of the machine, should be exclusively performed by qualified and certified professional personnel only.
Any use by the ice maker not intended to produce ice, using drinking water, is considered inappropriate.
It is extremely dangerous to modify or intend to modify this machine, and shall make any type warranty void.
This device is not intended for use by persons (including children) whose physical, sensory or mental capacities are limited, or who lack sufficient experience or knowledge, unless they are acting under the supervision of or have received instruction regarding proper use of the device from a person responsible for their safety. Children should be supervised to ensure they do not play with the device.
Children should be monitored to assure that they should not play near the equipment.
This machine is not intended to be used outdoors nor exposed to the rain.
Connect the equipment to the drinking water network.
The machine should be connected using the power cable supplied with the equipment. The connection is not intended for fixed cabling.
This appliance uses flammable refrigerant (propane), stored in the unit's refrigeration circuit.
For this reason, the following precautions should be followed:

- Keep the openings for ventilation free from obstruction.
- Do not use mechanical devices or other means to accelerate defrosting, using only those recommended by the manufacturer.
- Do not damage the refrigeration circuit.
- Do not use electrical devices inside the food compartments unless they have been approved by the manufacturer.
- Explosive substances, such as aerosols, should not be stored in this device.

In case of refrigerant leakage:

- Do not generate any flame in the vicinity of the appliance.
- Do not operate on/off switches or plug/unplug power cables in the vicinity of the appliance.
- Do not use a direct flame.
- Ventilate the area around the appliance immediately by opening doors and windows.
- Notify an authorized service technician.

IT IS MANDATORY TO GROUND THE EQUIPMENT
To avoid possible discharges on individuals or damages to the equipment, the machine should be grounded pursuant local and/or national regulations as the case may be.
THE MANUFACTURER SHALL BE HELD HARMLESS IN CASE OF DAMAGES ARISING DUE TO THE LACK OF THE GROUND INSTALLATION.

In order to assure the proper operation and efficiency of this equipment, it is of paramount importance to follow the recommendations of the manufacturer, SPECIALLY THOSE RELATED TO CLEANING AND MAINTENANCE OPERATIONS, which should be performed mostly by qualified personnel only.
CAUTION:
Do not try to perform repairs. The intervention of non-qualified personnel, besides of being dangerous, could result in serious malfunctioning. In case of damages, contact your distributor. We recommend to always use original replacement and spare parts.

Perform all discharge and recovery of materials or waste according the national regulations in force.

RECEPTION OF THE MACHINE

Inspect the outside packing. In case of damages, MAKE THE CORRESPONDING CLAIM TO THE CARRIER. To confirm the existence of damages, UNPACK THE MACHINE IN THE PRESENCE OF THE CARRIER and state any damage on the equipment on the reception document, or on a separate instrument. As from May 1, 1998 complies with the European regulations on management of packing and packing waste, inserting the "*Green Dot Label*" on all their packages.

Always state the machine number and model. This number is printed on three locations:

Packing

On the outside, it contains a label with the manufacturing number.

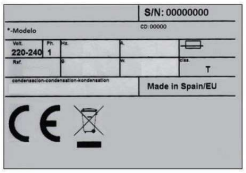

Exterior of the equipment

On the back of the equipment, there appears a label with the same characteristics as the previous one.

Nameplate

On the back of the machine.

Check that in interior of the machine the installation kit is complete and comprises:

- Ice scraper, ¾ gas pipe, 22 mm (0.86 inches) discharge hose, two filters and manual.

CAUTION: *ALL PACKING ELEMENTS (plastic bags, carton boxes and wood pallets) SHOULD BE KEPT OUTSIDE THE REACH OF CHILDREN, AS THEY ARE A SOURCE OF POTENTIAL HAZARD.*

INSTALLATION
EMPLACEMENT GUIDELINES

THIS ICE MAKER IS **NOT** DESIGNED FOR OUTDOOR OPERATION.

An incorrect installation of the equipment may cause damages to individuals, animals or other materials, being the manufacturer not responsible for such damages.

CAUTION:

The NG DP machines are designed to operate at room temperature between 10ºC (50ºF) and 43ºC (109.40ºF). There may be some difficulties in ice- cube removal under the minimum temperatures. Above the maximum temperature, the life of the compressor is shortened and the production is substantially less.
The air flow in air-condensed machines enters through the front grille, entering on the right front and exiting on the left front side. In addition, the unit is equipped with a rear air vent. Do not obstruct the front grille with any objects.
The unit can operate embedded, but with a reduction in output.
In case the front louver is not enough, the exit is either total or partially obstructed or due to its placement it will receive hot air from another device, we recommend, in case it is not possible to change the location of the machine, TO INSTALL A WATER COOLED UNIT
IT IS IMPORTANT THAT THE WATER PIPING DO NOT PASS BY OR NEAR SOURCES OF HEAT SO AS NOT TO LOSE ICE PRODUCTION.

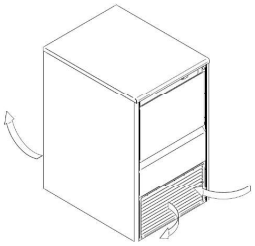

THREAD THE SUPPORT LEGS TO THE BASE OF THE MACHINE ON THE HOUSING SET TO SUCH END AND REGULATE THE HEIGHT AS TO HAVE THE EQUIPMENT PERFECTLY LEVELED.

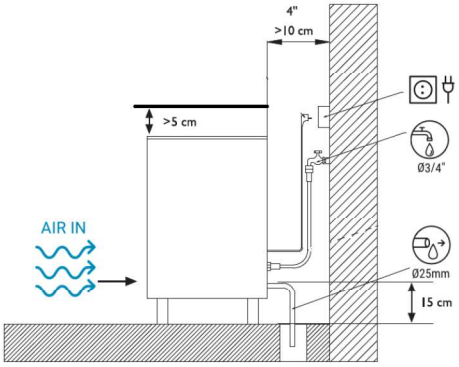

Water and Drainage

Water quality has a remarkable influence on the appearance, hardness and flavor of the ice as well as, on the machines condensated by water, on the life of the condenser.

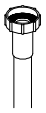

Connections to the Water Network

Use a flexible pipe (1.3 m – 4.27 feet length) with the two filter joints supplied with the machine.
Pressure should be established between 0.1 MPa and 0.6 MPa (1-6 BAR)
If pressures overpass such values, install the necessary corrective devices.

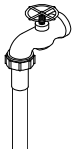

Connection to Drainage

Drainage should be located lower to the machine level, at 150 mm (5.91 inches) minimum. It is convenient that the drainage pipe is of 30 mm (1.18 in) of interior diameter and with a minimum gradient of 3 cm (1.18 in) per meter (see figure).

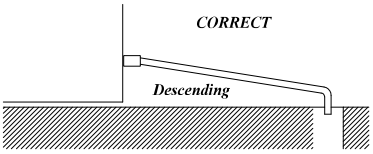

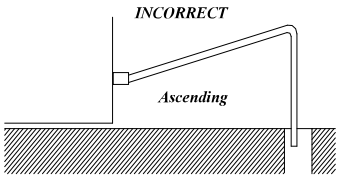

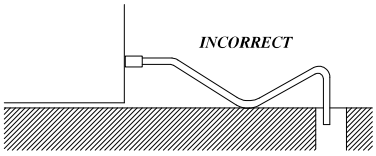

Electrical Connection:

IT IS MANDATORY TO GROUND THE EQUIPMENT
To avoid possible discharges on individuals or damages to the equipment, the machine should be grounded pursuant local and/or national regulations as the case may be.
THE MANUFACTURER SHALL BE HELD HARMLESS IN CASE OF DAMAGES ARISING DUE TO THE LACK OF THE GROUND INSTALLATION.

Caution:

- The positioning of the device must ensure that the power connection is not damaged or pinched.
- Do not install multiple portable power outlet strips or other portable power supplies in back of the device.

The machine is supplied with a 1.5 m (4.92 feet) cable of length. In case the supply cable is damaged, it should be replaced by a cable of special assembly to be furnished by the manufacturer or post-sale service. Such replacement should be performed by qualified technical service only.
The machine should be places in such a way as to allow a minimum space between the back and the wall to allow an easy access and without risks to the cable jack.
Safeguard the base of the jack.
It is advisable to install a power switch and the appropriate electrical safety devices in accordance with local and/or national regulations in each case.

Voltage and tension are indicated in the nameplate and on the technical specifications of this manual. Variation on voltage above the 10% stated on the nameplate could result on damages or prevent the machine start-up.

START-UP
Previous Checkup

a) Is the machine leveled?
b) Voltage and frequency are the same as those on the nameplate?
c) Are the discharges connected and operating?
d) ** If air condensed: Is the air circulation and its temperature appropriate?
e)

	ROOM	WATER
MAXIMUM	43ºC (109.40ºF)	35ºC (95ºF)
MINIMUM	5ºC (41ºF)	5ºC (41ºF)

** Is water pressure appropriate?

MINIMUM	0.1 MPa (1 Bar)
MAXIMUM	0.6 MPa (6 Bar)

NOTE: In case input water pressure is higher that 6 MPa (6 BAr), install a pressure reducer. THE FAUCET CONNECTION PRESSURE SHOULD NEVER BE REDUCED.

START-UP
Once the installation instructions are followed (ventilation, site conditions, temperatures, water quality, etc.), proceed as follows:

1) Open the water inlet. Verify the existence of leakages.
2) Open the door and remove the protection elements that are inserted on the curtain.
3) Connect the machine to the electrical network.
4) Verify that there are no vibrations or frictions on the elements.

5) Verify that the curtain moves freely.
6) The machine has a timer governing startup, allowing for water to be recharged for the production cycle
7) Verify that the injectors send the water to the evaporator on the right direction (even spread).
8) Check the cubes after two cycles; they should be uniform in shape. If they do not come out correctly, or the unit does not make ice, contact an authorized service technician.
9) The unit produces ice until the bin is full, using a stop sensor. When the ice is removed from the bin, the unit will once again produce ice.

CAUTION:
INSTRUCT THE USER ABOUT MAINTENANCE, INFORMING THAT
MAINTENANCE AND CLEANING OPERATION AS WELL AS DAMAGES DUE TO THE LACK OF SUCH OPERATIONS: *ARE NOT INCLUDED ON THE WARRANTY.*

MAINTENANCE AND CLEANING INSTRUCTIONS

CAUTION: Maintenance and cleaning operations and damages as the lack of those activities: Are not included on the warranty.
If a good maintenance is performed, the machine will continue producing a good quality ice and will be free of damages.
Maintenance and cleaning intervals will depend on the conditions of the location and water quality.
CAUTION: At least, one revision and cleaning should be performed every six months.
On dusty environments, it might be necessary to clean the condenser on a monthly basis.

MAINTENANCE AND CLEANING PROCEDURES

NOTE: For cleaning and maintenance: ensure that the machine is disconnected from electrical supply, except when cleaning the production bin.

Water condenser

1) Disconnect the machine.
2) Disconnect the water inlet or close the faucet.
3) Disconnect the water inlet and outlet from the condenser.
4) Prepare a solution at the 50% of phosphoric acid and distilled or demineralized water.
5) Make the solution circulate through the condenser. (The solution is more effective if hot – between 35ºC [95ºF] and 40ºC [104ºF]).

DO NOT USE HYDROCHLORIC ACID.

Air Condenser

1) Disconnect the machine.
2) Disconnect the water inlet or close the faucet.
3) Clean the louvered area with the help of an aspirator with a brush, non-metallic brush or low-pressure air.

Cleaning the ice bin and exterior.

1) Disconnect the machine, switch off the water supply and empty the ice bin.
2) Clean with a soft kitchen cloth, plenty of water and a mild detergent.

Collectors and Injectors

1) Remove the curtain. (Take the time to clean it with phosphoric acid, clean with bleach and clear under water).
2) Remove the louver of ice drop. (Clean as done with the curtain).
3) PULL THE COLLECTOR UPWARDS. IT IS PRESSURE MOUNTED.
4) Disassemble the nozzles and lids, and clean them.
5) Disassemble and clean the main head filter. (IT IS PRESSURE MOUNTED).
6) Assemble the filter, injectors and collector.

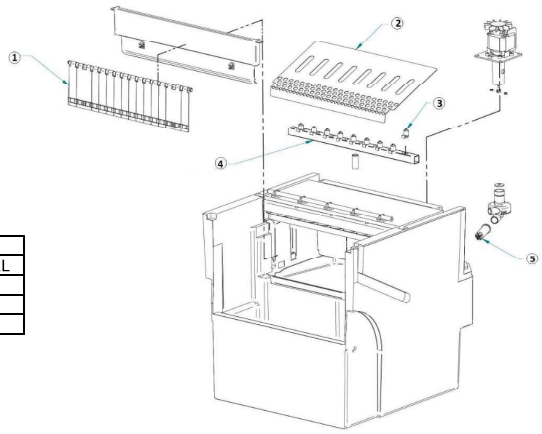

1	CURTAIN
2	EJECTION PANEL
3	NOZZLE
4	COLLECTOR
5	PUMP FILTER

CAUTION: IT IS VERY IMPORTANT WHEN REPLACING THE CONTAINER THAT THE NOZZLES ARE PERPENDICULAR, AS IF TWISTED, THE EXTERNAL CUBES COULD RUN OUT OF WATER.

Cleaning of the Inlet filters

They are easily obstructed during the first days of operation, MAINLY WITH NEW PIPING INSTALLATIONS. Loose the hose and clean it under water.

Water Leak Control

When working on the machine, always check the water connections, status of the clamps and hoses with the purpose of avoiding leakages and prevent damages or floods.

D

In Übereinstimmung mit den Anforderungen der Europäischen Richtlinie 2002/96/EG über Elektro- und Elektronik-Altgeräte (WEEE) ist vorliegendes Gerät mit einer Markierung versehen.
Sie leisten einen positiven Beitrag für den Schutz der Umwelt und die Gesundheit des Menschen, wenn Sie dieses Gerät einer gesonderten Abfallsammlung zuführen. Im unsortierten Siedlungsmüll könnte ein solches Gerät durch unsachgemäße Entsorgung negative Konsequenzen nach sich ziehen.
Auf dem Produkt oder der beiliegenden Produktdokumentation ist folgendes Symbol einer durchgestrichenen Abfalltonne abgebildet. Es weist darauf hin, dass eine Entsorgung im normalen Haushaltsabfall nicht zulässig ist Entsorgen Sie dieses Produkt im Recyclinghof mit einer getrennten Sammlung für Elektro- und Elektronikgeräte.
Die Entsorgung muss gemäß den örtlichen Bestimmungen zur Abfallbeseitigung erfolgen.
Bitte wenden Sie sich an die zuständigen Behörden Ihrer Gemeindeverwaltung, an den lokalen Recyclinghof für Haushaltsmüll oder an den Händler, bei dem Sie dieses Gerät erworben haben, um weitere Informationen über Behandlung, Verwertung und Wiederverwendung dieses Produkts zu erhalten.

GB

This appliance is marked according to the European directive 2002/96/EC on Waste Electrical and Electronic Equipment (WEEE).
By ensuring this product is disposed of correctly, you will help prevent potential negative consequences for the environment and human health, which could otherwise be caused by inappropriate waste handling of this product.
The symbol on the product, or on the documents accompanying the product, indicates that this appliance may not be treated as household waste. Instead it shall be handed over to the applicable collection point for the recycling of electrical and electronic equipment.
Disposal must be carried out in accordance with local environmental regulations for waste disposal.
For more detailed information about treatment, recovery and recycling of this product, please contact your local city office, your household waste disposal service or the shop where you purchased the product.

F

Cet appareil porte le symbole du recyclage conformément à la Directive Européenne 2002/96/CE concernant les Déchets d'Équipements Électriques et Électroniques (DEEE ou WEEE).
En procédant correctement à la mise au rebut de cet appareil, vous contribuerez à empêcher toute conséquence nuisible pour l'environnement et la santé de l'homme.
Le symbole présent sur l'appareil ou sur la documentation qui l'accompagne indique que ce produit ne peut en aucun cas être traité comme déchet ménager. Il doit par conséquent être remis à un centre de collecte des déchets chargé du recyclage des équipements électriques et électroniques.
Pour la mise au rebut, respectez les normes relatives à l'élimination des déchets en vigueur dans le pays d'installation.
Pour obtenir de plus amples détails au sujet du traitement, de la récupération et du recyclage de cet appareil, veuillez vous adresser au bureau compétent de votre commune, à la société de collecte des déchets ou directement à votre revendeur.

NL

Dit apparaat is voorzien van het merkteken volgens de Europese richtlijn 2002/96/EG inzake Afgedankte elektrische en elektronische apparaten (AEEA).
Door ervoor te zorgen dat dit product op de juiste manier als afval wordt verwerkt, helpt u mogelijk negatieve consequenties voor het milieu en de menselijke gezondheid te voorkomen die anders zouden kunnen worden veroorzaakt door onjuiste verwerking van dit product als afval.
Het symbool op het product of op de bijbehorende documentatie geeft aan dat dit product niet als huishoudelijk afval mag worden behandeld. In plaats daarvan moet het worden afgegeven bij een verzamelpunt voor recycling van elektrische en elektronische apparaten.
Afdanking moet worden uitgevoerd in overeenstemming met de plaatselijke milieuvoorschriften voor afvalverwerking.
Voor nadere informatie over de behandeling, terugwinning en recycling van dit product wordt u verzocht contact op te nemen met het stadskantoor in uw woonplaats, uw afvalophaaldienst of de winkel waar u het product heeft aangeschaft.

E

Este aparato lleva el marcado CE en conformidad con la Directiva 2002/96/EC del Parlamento Europeo y del Consejo sobre residuos de aparatos eléctricos y electrónicos (RAEE).
La correcta eliminación de este producto evita consecuencias negativas para el medioambiente y la salud.
El símbolo en el producto o en los documentos que se incluyen con el producto, indica que no se puede tratar como residuo doméstico. Es necesario entregarlo en un punto de recogida para reciclar aparatos eléctricos y electrónicos.
Deséchelo con arreglo a las normas medioambientales para eliminación de residuos.
Para obtener información más detallada sobre el tratamiento, recuperación y reciclaje de este producto, póngase en contacto con el ayuntamiento, con el servicio de eliminación de residuos urbanos o la tienda donde adquirió el producto.

P

Este aparelho está classificado de acordo com a Directiva Europeia 2002/96/EC sobre Resíduos de equipamento eléctrico e electrónico (REEE).
Ao garantir a eliminação adequada deste produto, estará a ajudar a evitar potenciais consequências negativas para o ambiente e para a saúde pública, que poderiam derivar de um manuseamento de desperdícios inadequado deste produto.
O símbolo no produto, ou nos documentos que acompanham o produto, indica que este aparelho não pode receber um tratamento semelhante ao de um desperdício doméstico.
Pelo contrário, deverá ser depositado no respectivo centro de recolha para a reciclagem de equipamento eléctrico e electrónico.
A eliminação deverá ser efectuada em conformidade com as normas ambientais locais para a eliminação de desperdícios.
Para obter informações mais detalhadas sobre o tratamento, a recuperação e a reciclagem deste produto, contacte o Departamento na sua localidade, o seu serviço de eliminação de desperdícios domésticos ou a loja onde adquiriu o produto.

I

Questo apparecchio è contrassegnato in conformità alla Direttiva Europea 2002/96/EC, Waste Electrical and Electronic Equipment (WEEE).
Assicurandosi che questo prodotto sia smaltito in modo corretto, l'utente contribuisce a prevenire le potenziali conseguenze negative per l'ambiente e la salute.
Il simbolo sul prodotto o sulla documentazione di accompagnamento indica che questo prodotto non deve essere trattato come rifiuto domestico ma deve essere consegnato presso l'idoneo punto di raccolta per il riciclaggio di apparecchiature elettriche ed elettroniche.
Disfarsene seguendo le normative locali per lo smaltimento dei rifiuti.
Per ulteriori informazioni sul trattamento, recupero e riciclaggio di questo prodotto, contattare l'idoneo ufficio locale, il servizio di raccolta dei rifiuti domestici o il negozio presso il quale il prodotto è stato acquistato.

GR

Αυτή η συσκευή φέρει σήμανση σύμφωνα με την Ευρωπαϊκή οδηγία 2002/96/ΕΕ σχετικά με Απορριπτόμενα ηλεκτρικά και ηλεκτρονικά εξαρτήματα (WEEE).
Εξασφαλίζοντας ότι το προϊόν αυτό απορρίπτεται σωστά, θα βοηθήσετε στην πρόληψη πιθανά αρνητικών επιπτώσεων για το περιβάλλον και την ανθρώπινη υγεία, οι οποίες θα μπορούσαν να δημιουργηθούν από τον ακατάλληλο χειρισμό αυτού του προϊόντος ως απόρριμμα.
Το σύμβολο πάνω στο προϊόν, ή στα έγγραφα που συνοδεύουν το προϊόν, υποδεικνύει ότι αυτή η συσκευή δεν μπορεί να θεωρηθεί οικιακό απόρριμμα. Αντί γι αυτό θα πρέπει να παραδοθεί στο κατάλληλο σημείο περισυλλογής για την ανακύκλωση των ηλεκτρικών και ηλεκτρονικών εξαρτημάτων.
Διαλύστε το τηρώντας την τοπική νομοθεσία για τη διάθεση των απορριμμάτων.
Για πιο λεπτομερείς πληροφορίες σχετικά με την επεξεργασία, την περισυλλογή και την ανακύκλωση αυτού του προϊόντος, παρακαλούμε επικοινωνήστε με το αρμόδιο γραφείο της τοπικής σας αυτοδιοίκησης, την τοπική σας υπηρεσία αποκομιδής οικιακών απορριμμάτων ή το κατάστημα όπου αγοράσατε αυτό το προϊόν.

S

Denna produkt är märkt enligt EG-direktiv 2002/96/EEC beträffande elektriskt och elektroniskt avfall (Waste Electrical and Electronic Equipment, WEEE).
Genom att säkerställa en korrekt kassering av denna produkt bidrar du till att förhindra potentiella, negativa konsekvenser för vår miljö och vår hälsa, som annars kan bli följden om produkten inte hanteras på rätt sätt.
Symbolen på produkten, eller i medföljande dokumentation, indikerar att denna produkt inte får behandlas som vanligt hushållsavfall. Den skall i stället lämnas in på en lämplig uppsamlingsplats för återvinning av elektrisk och elektronisk utrustning.
Produkten måste kasseras enligt lokala miljöbestämmelser för avfallshantering.
För mer information om hantering, återvinning och återanvändning av denna produkt, var god kontakta de lokala myndigheterna, ortens sophanteringstjänst eller butiken där produkten inhandlades.

N

Dette apparatet er merket i samsvar med EU-direktiv 2002/96/EC om avhending av elektrisk og elektronisk utstyr (Waste Electrical and Electronic Equipment - WEEE).
Forsikre deg om at dette produktet blir avhendet på korrekt vis, slik at det ikke kan utgjøre noen helse- eller miljørisiko.

Symbolet på produktet eller på dokumentene som følger med det, viser at dette produktet ikke må behandles som husholdningsavfall. Lever det til et autorisert mottak for resirkulering av elektrisk og elektronisk utstyr.
Avhending må skje iht. de lokale renovasjonsforskriftene.
For nærmere informasjon om håndtering, kassering og resirkulering av dette produktet, kontakt kommunen, renovasjonsvesenet eller forretningen der du anskaffet det.

DK

Dette produkt er mærket i henhold til EU-direktiv 2002/96/EF om Kasseret elektrisk og elektronisk udstyr (WEEE).
Ved at sikre, at dette produkt bliver skrottet korrekt, hjælper man med til at forhindre potentielle, negative konsekvenser for miljøet og folkesundheden, der kunne opstå gennem uhensigtsmæssig bortskaffelse af dette produkt.

Symbolet på produktet eller på dokumenterne, der ledsager produktet, angiver, at produktet ikke må bortskaffes sammen med husholdningsaffaldet. Det skal i stedet afleveres på en genbrugsstation for elektrisk og elektronisk udstyr.
Det skal skrottes i henhold til gældende lokale miljøregler for bortskaffelse af affald.
For yderligere oplysninger om håndtering, genvinding og genbrug af dette produkt bedes man kontakte de lokale myndigheder, renovationsselskabet eller forretningen, hvor produktet er købt.

FIN

Tämä laite on merkitty WEEE-direktiivin (Waste Electrical and Electronic Equipment) 2002/96/EC mukaisesti.
Varmistamalla, että tuote poistetaan käytöstä asianmukaisesti, voidaan auttaa estämään sellaiset ympäristö- ja terveyshaitat, jotka saattaisivat aiheutua jätteiden asiattomasta käsittelystä.

Symboli tuotteessa tai sen dokumentaatiossa tarkoittaa, ettei laitetta saa hävittää kotitalousjätteiden mukana. Sen sijaan tuote on toimitettava sähkö- ja elektroniikkakomponenttien keräys- ja kierrätyspisteeseen.
Laitteen käytöstäpoiston suhteen on noudatettava paikallisia jätehuoltomääräyksiä.
Lisätietoja tuotteen käsittelystä, talteenotosta ja kierrätyksestä saa kaupungin- tai kunnanvirastosta, paikallisesta jätehuoltoliikkeestä tai liikkeestä, josta tuote ostettiin.

PL

Niniejsze urządzenie posiada oznaczenia zgodnie z Dyrektywą Europejską 2002/96/EC w sprawie zużytego sprzętu elektrycznego i elektronicznego (WEEE).
Zapewniając prawidłowe złomowanie niniejszego urządzenia przyczynią się Państwo do ograniczenia ryzyka wystąpienia negatywnego wpływu produktu na środowisko i zdrowie ludzi, które mogłoby zaistnieć w przypadku niewłaściwej utylizacji urządzenia.

Symbol umieszczony na produkcie lub na dołączonych do niego dokumentach oznacza, że niniejszy produkt nie jest klasyfikowany jako odpad z gospodarstwa domowego.
Urządzenie, w celu jego złomowania, należy zdać w odpowiednim punkcie utylizacji odpadów w celu recyklingu komponentów elektrycznych i elektronicznych.
Urządzenie należy złomować zgodnie z lokalnymi przepisami dot. utylizacji odpadów.
Dodatkowe informacje na temat utylizacji, złomowania i recyklingu opisywanego urządzenia można uzyskać w lokalnym urzędzie miasta, w miejskim przedsiębiorstwie utylizacji odpadów lub w sklepie, w którym produkt został zakupiony.

CZ

Tento spotřebič je označený v souladu s evropskou směrnicí 2002/96/ES o likvidaci elektrického a elektronického zařízení (WEEE).
Zajištěním správné likvidace tohoto výrobku pomůžete zabránit případným negativním důsledkům na životní prostředí a lidské zdraví, ke kterým by nevhodnou likvidací tohoto výrobku mohlo dojít.

Symbol na výrobku nebo na dokumentech přiložených k výrobku udává, že tento spotřebič nepatří do domácího odpadu. Spotřebič je nutné odvézt do sběrného místa pro recyklaci elektrického a elektronického zařízení.
Likvidace musí být provedena v souladu s místními předpisy o ochraně životního prostředí, které se týkají likvidace odpadu.
Podrobnější informace o zpracování, rekuperaci a recyklaci tohoto výrobku zjistíte u příslušného místního úřadu, služby pro likvidaci domovního odpadu nebo v obchodě, kde jste výrobek zakoupili.

SK

Tento spotrebič je označený v súlade s Európskou smernicou 2002/96/ES o likvidácii elektrických a elektronických zariadení (WEEE).
Zabezpečením, že tento výrobok bude zlikvidovaný správnym spôsobom, pomôžete predchádzať potenciálnym negatívnym dopadom na životné prostredie a ľudské zdravie, ktoré by sa v inom prípade mohli vyskytnúť pri nevhodnom zaobchádzaní pri likvidácii tohto výrobku.

Symbol na výrobku alebo na sprievodných dokumentoch znamená, že s týmto výrobkom sa nesmie zaobchádzať ako s domovým odpadom. Naopak, treba ho odovzdať v zbernom stredisku na recykláciu elektrických alebo elektronických zariadení.
Likvidácia musí byť vykonaná v súlade s predpismi na ochranu životného prostredia pre likvidáciu odpadov.
Podrobnejšie informácie o zaobchádzaní, regenerácii a recyklácii tohto výrobku si vyžiadajte na Vašom miestnom úrade, v zberných surovinách alebo v obchode, kde ste výrobok kúpili.

H

A készüléken található jelzés megfelel az elektromos és elektronikus berendezések hulladékairól szóló 2002/96/EK európai irányelvben (WEEE) foglalt előírásoknak.
A hulladékká vált termék szabályszerű elhelyezésével Ön segít elkerülni a környezettel és az emberi egészséggel kapcsolatos azon esetleges negatív következményeket, amelyeket a termék nem megfelelő hulladékkezelése egyébként okozhatna.
A terméken vagy a termékhez mellékelt dokumentumokon feltüntetett jelzés arra utal, hogy ez a termék nem kezelhető háztartási hulladékként. Ehelyett a terméket a villamos és elektronikus berendezések újrahasznosítását végző telephelyek valamelyikén kell leadni.
Kiselejtezéskor a hulladékeltávolításra vonatkozó helyi környezetvédelmi előírások szerint kell eljárni.
A termék kezelésével, hasznosításával és újrahasznosításával kapcsolatos bővebb tájékoztatásért forduljon a lakóhelye szerinti polgármesteri hivatalhoz, a háztartási hulladékok kezelését végző társasághoz vagy ahhoz a bolthoz, ahol a terméket vásárolta.

RUS

Данное изделие промаркировано в соответствии с Европейской директивой 2002/96/ЕС по утилизации электрического и электронного оборудования (WEEE).
Обеспечив правильную утилизацию данного изделия, Вы поможете предотвратить потенциальные негативные последствия для окружающей среды и здоровья человека, которые могли бы иметь место в противном случае.

Символ на самом изделии или сопроводительной документации указывает, что при утилизации данного изделия с ним нельзя обращаться как с обычными бытовыми отходами Вместо этого, его следует сдавать в соответствующий пункт приемки электрического и электронного оборудования для последующей утилизации.
Сдача на слом должна производиться в соответствии с местными правилами по утилизации отходов.
За более подробной информацией о правилах обращения с такими изделиями, их утилизации и переработки обращайтесь в местные органы власти, в службу по утилизации отходов или в магазин, в котором Вы приобрели данное изделие.

BG

Този уред е маркиран в съответствие с Европейска директива 2002/96/ЕО "Електрическо и електронно оборудване за отпадъци" (WEEE).
Като се погрижите това изделие да бъде изхвърлено по правилен начин, вие ще помогнете за предотвратяване на възможните негативни последствия за околната среда и здравето на хората, което в противен случай може да бъде предизвикано от неправилно изхвърляне на това изделие.

Символът върху изделието или върху документите, приложени към изделието, показва, че това изделие не бива да се третира като битови отпадъци. Вместо това, то трябва да се предава в специализиран пункт за рециклиране на електрическо и електронно оборудване.
При изхвърлянето му спазвайте местните норми за изхвърляне на отпадъци.
За по-подробна информация за третирането, възстановяването и рециклирането на това изделие се обърнете към вашата местна градска управа, към вашата служба за изхвърляне на битови отпадъци или към магазина, откъдето сте закупили изделието.

RO

Acest aparat este marcat în conformitate cu Directiva Europeană 2002/96/CE referitoare la Deşeurile de Echipament Electric şi Electronic (WEEE).
Asigurându-vă că acest produs este eliminat în mod corect, contribuiţi la prevenirea potenţialelor consecinţe negative asupra mediului înconjurător şi sănătăţii persoanelor, consecinţe care ar putea fi provocate de aruncarea necorespunzătoare la gunoi a acestui produs.

Simbolul de pe produs, sau de pe documentele care însoţesc produsul, indică faptul că acesta nu poate fi aruncat împreună cu deşeurile menajere. Trebuie predat la punctul de colectare corespunzător, pentru reciclarea echipamentului electric şi electronic.
Aruncarea la gunoi a aparatului trebuie făcută în conformitate cu normele locale pentru eliminarea deşeurilor.
Pentru informaţii mai detaliate privind eliminarea, valorificarea şi reciclarea acestui produs, vă rugăm să contactaţi administraţia locală, serviciul de eliminare a deşeurilor menajere sau magazinul de unde aţi cumpărat produsul.

C275U • 2019